KingTron *Stainless Steel & Carbon Steel valve series*

3-WAY STANDARD PORT BALL VALVES

FIG. S-451T-T / C-451T-T: THREADED ENDS, T PORT, 1000 PSI(69 BAR) W.O.G., ISO 5211 MOUNTING PAD.

FEATURES:

- Standard port design to gain cost-savings.
- Adjustable packing gland. Bottom-loaded blow-out proof stem.
- Low operating torque to reduce automation costs.
- Mounting pad complied with ISO 5211 for ease and interchangeability of actuation.
- Basic design complied with ANSI B16.34 & EN12516-1.
- NPT threaded ends complied with ANSI B 1.20.1.
- Rc, Rp & G Threaded ends complied with BS 21/2779, JIS B-0203/0202, DIN 259/2999, ISO 228-1, AS1722.1/1722.2 are upon request.
- Tested according to API 598.

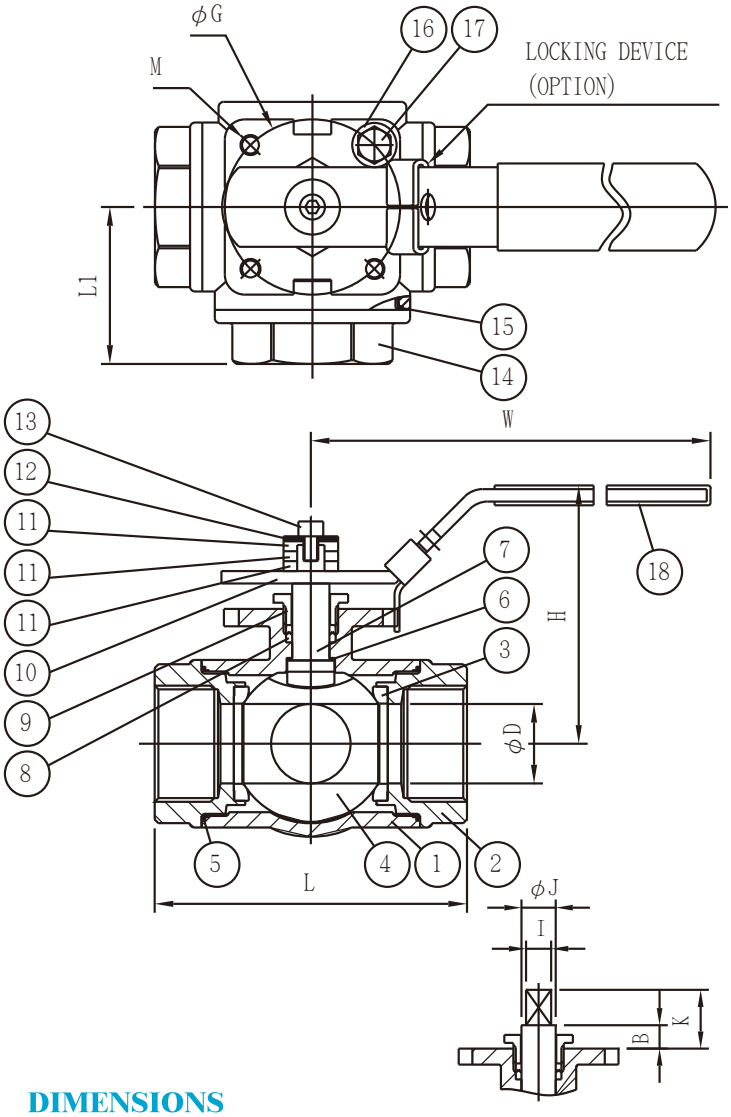

MATERIALS LIST:

NO.	PARTS	S-451T-T	C-451T-T
1	BODY	ASTM A351-CF8M	ASTM A216-WCB
2	END CAP	ASTM A351-CF8M	ASTM A216-WCB
3	SEAT	PTFE	PTFE
4	BALL	ASTM A351-CF8M/316	ASTM A351-CF8/304
5	GASKET	PTFE	PTFE
6	THRUST WASHER	PTFE	PTFE
7	STEM	ASTM A276-316	ASTM A276-304
8	STEM PACKING	PTFE	PTFE
9	GLAND	AISI 304	AISI 304
10	HANDLE	AISI 304	ZINC PLATED STEEL
11	WASHER	AISI 304	CARBON STEEL
12	WASHER	AISI 304	CARBON STEEL
13	SCREW	AISI 304	CARBON STEEL
14	END CAP	ASTM A351-CF8M	ASTM A216-WCB
15	GASKET	PTFE	PTFE
16	STOPPER	AISI 304	CARBON STEEL
17	STOP SCREW	AISI 304	CARBON STEEL
18	HANDLE COVER	PVC	PVC

OPTIONS:

-L: LOCKING DEVICE.
-P: EQUIPPED WITH PNEUMATIC ACTUATOR.
FIG. S-451T-L/C-451T-L: WITH L-PORT

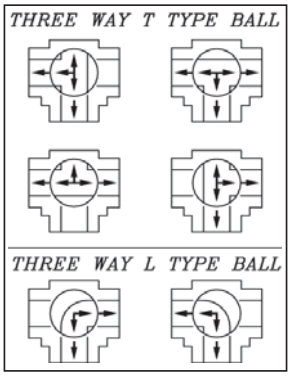

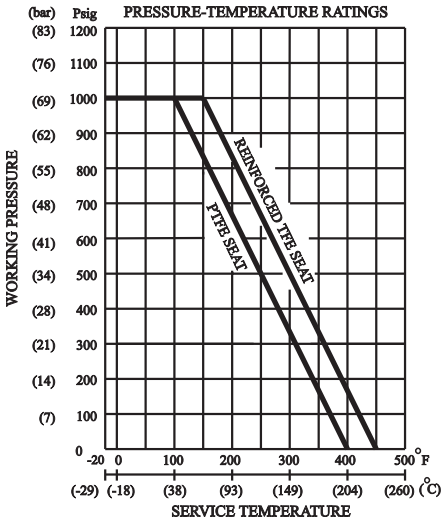

DIMENSIONS

SIZE		ϕD		L		L1		I		ϕJ		K		ϕG		M	H		W		B	
in	DN	in	mm	in	mm	in	mm	in	mm	in	mm	in	mm	in	mm	mm	in	mm	in	mm	in	mm
1/4"	8	0.43	11	2.72	69	1.38	35	0.35	9	0.47	12	0.43	11	1.65	42	M5	2.28	58	4.17	106	0.24	6
3/8"	10	0.43	11	2.72	69	1.38	35	0.35	9	0.47	12	0.43	11	1.65	42	M5	2.28	58	4.17	106	0.24	6
1/2"	15	0.49	12.5	2.95	75	1.50	38	0.35	9	0.47	12	0.43	11	1.65	42	M5	2.40	61	5.20	132	0.24	6
3/4"	20	0.63	16	3.39	86	1.73	44	0.43	11	0.59	15	0.55	14	1.97	50	M6	2.91	74	5.20	132	0.24	6
1"	25	0.79	20	3.98	101	1.97	50	0.43	11	0.59	15	0.75	19	1.97	50	M6	3.19	81	6.38	162	0.31	8
1 1/4"	32	0.98	25	4.53	115	2.27	57.7	0.43	11	0.59	15	0.75	19	1.97	50	M6	3.46	88	6.38	162	0.31	8
1 1/2"	40	1.26	32	4.92	125	2.48	63	0.43	11	0.59	15	0.94	24	2.76	70	M8	4.09	104	8.66	220	0.33	8.5
2"	50	1.50	38	5.87	149	2.95	75	0.55	14	0.73	18.5	0.98	25	2.76	70	M8	4.33	110	8.66	220	0.33	8.5

We reserve the rights to modify our product design or construction for improvement without prior notice.