KingTron *Stainless Steel & Carbon Steel valve series*

2-PIECE FULL PORT BALL VALVES

FIG. S-292T / C-292T: THREADED ENDS, 1/4" TO 2": 2000 PSI (138 BAR) W.O.G., 2 1/2" TO 4": 1500 PSI (103 BAR) W.O.G..

FEATURES:

- Strengthened construction secures 2000 psi working pressure rating. Reinforced TFE seats increase durability.
- Adjustable packing gland.
- Bottom-loaded blow-out proof stem.
- Basic design complied with ANSI B16.34 & EN 12516-1.
- NPT threaded ends complied with ANSI B 1.20.1..
- Rc, Rp & G Threaded ends complied with BS 21/2779, JIS B-0203/0202, DIN 259/2999, ISO 228-1, AS1722.1/1722.2 are upon request.
- Tested according to API 598.

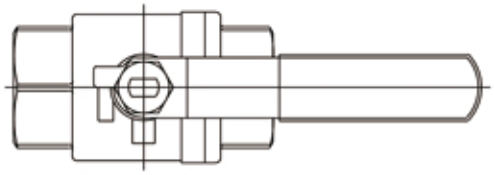

MATERIALS LIST:

NO.	PARTS	S-292T	C-292T
1	BODY	ASTM A351-CF8M	ASTM A216-WCB
2	END CAP	ASTM A351-CF8M	ASTM A216-WCB
3	SEAT	REINFORCED PTFE	REINFORCED PTFE
4	GASKET	PTFE	PTFE
5	BALL	ASTM A351-CF8M/316	ASTM A351-CF8/304
6	THRUST WASHER	PTFE	PTFE
7	STEM	ASTM A276-316	ASTM A276-304
8	STEM PACKING	PTFE	PTFE
9	GLAND	AISI 304	AISI 304
10	HANDLE	AISI 304	ZINC PLATED STEEL
11	HANDLE WASHER	AISI 304	AISI 304
12	HANDLE NUT	AISI 304	AISI 304
13	HANDLE COVER	PVC	PVC

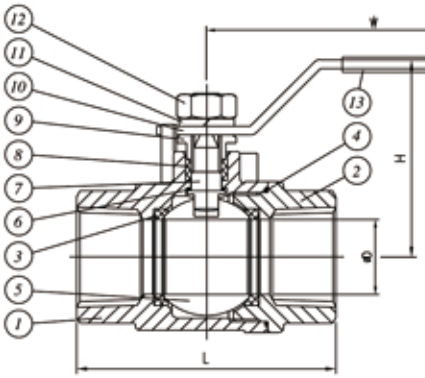

OPTIONS:

-L : LOCKING DEVICE.
-M: TAPPED MOUNTING PAD FOR SIZES 1 1/4" TO 4".
-V : VENTED BALL.

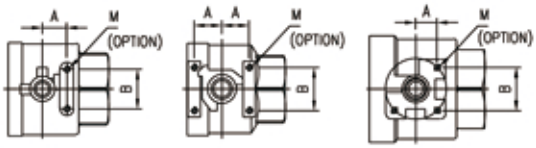

FOR 1 1/4"~2" *FOR 2 1/2"~3"* *FOR 4"*

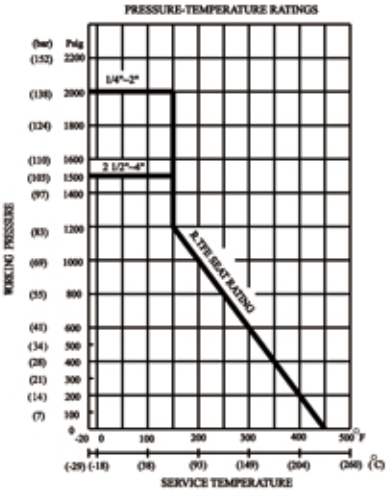

DIMENSIONS

SIZE		ΦD		L		A		B		H		W		M
in	mm	in	mm	in	mm	in	mm	in	mm	in	mm	in	mm	(OPTION)
1/4"	8	0.43	11	2.17	55	-	-	-	-	2.09	53	3.70	94	-
3/8"	10	0.49	12.5	2.17	55	-	-	-	-	2.09	53	3.70	94	-
1/2"	15	0.59	15	2.56	65	-	-	-	-	2.09	53	3.70	94	-
3/4"	20	0.79	20	2.80	71	-	-	-	-	2.22	56.5	4.37	111	-
1"	25	1.00	25.4	3.39	86	-	-	-	-	2.58	65.6	4.37	111	-
1 1/4"	32	1.26	32	3.86	98	0.93	23.6	1.50	38.1	2.80	71	4.37	111	1/4-20UNC
1 1/2"	40	1.50	38	4.37	111	0.93	23.6	1.50	38.1	3.15	80	5.37	136.5	1/4-20UNC
2"	50	1.97	50	4.96	126	0.93	23.6	1.50	38.1	3.52	89.5	5.37	136.5	1/4-20UNC
2 1/2"	65	2.56	65	6.38	162	1.38	35.0	2.17	55.0	5.06	128.5	9.57	243	1/4-20UNC
3"	80	3.15	80	7.09	180	1.38	35.0	2.17	55.0	5.49	139.5	9.57	243	1/4-20UNC
4"	100	3.94	100	9.09	231	1.42	36.1	2.84	72.1	6.59	167.5	10.79	274	M10

We reserve the rights to modify our product design or construction for improvement without prior notice.